Operating manual

Vacuum valve (spring loaded)

12501, 12525, 12550, 12551, 12555

handtmann
Ideas for the future.

1 General

1.1 Manufacturer

Albert Handtmann Armaturenfabrik GmbH & Co. KG
Arthur-Handtmann-Str. 11; D-88400 Biberach
Tel.: +49(0) 73 51/3 42-0; Fax: +49(0) 73 51/3 42-44 80
E-Mail: sales.fittings@handtmann.de

1.2 Proper application

Vacuum valves are used in the food, beverage, pharmaceutical and chemical industries. They are suitable for the protection of tanks and other closed systems against negative pressure.

During installation, operation and maintenance please pay attention to the generally accepted safety regulations as well as to the operating instructions.

1.3 Misuse

Misuse is:

- Application in different operating conditions as intended for the specific type.
- Installation, operation and maintenance by unqualified staff.
- Any unauthorized modification of the valve or a valve component.
- On-observance of the operating instructions.

Any misuse will automatically lead to a loss of right to claim under guarantee as well as any liability.

1.4 Duties of operator

The operator has to make sure that:

- The valve/component is operated properly and only in functional condition.
- The legal requirements are kept during operation and maintenance.
- Only sufficiently qualified and authorized staff maintain the valve/component.
- The staff responsible for operation and maintenance know and obey the operating instructions and in particular the safety advice.
- The safety and warning signs remain on the valve/component and are always legible.

2 Safety Information

Notice and Safety

The following safety advice is an addition to existing national regulations and laws for accident prevention. Existing regulations and laws for accident prevention always have to be adhered to. Pay attention to the specific regulations and laws in your country.

The safety advice does not take into account:

- Coincidences and events that may occur during assembly, operation and maintenance.
- Local safety regulations in responsibility of the operator.

Basic safety advice

Requirements for a proper function of the valve/component:

- Proper transportation and storage
- Installation and setting into operation by authorized staff
- Operation according to these operating instructions – proper application
- Proper and regular maintenance

WARNING

Warning – general dangers!

To avoid danger for health and life the following safety instructions strictly have to be obeyed.

- Assembly and setting into operation only by qualified staff.
- Instruction and supervision by the operator.
- Keeping of technical and electrical data as specified in the operating instructions.
- Guarantee the electric safety of external devices.
- Keep legal regulations.

Non-observance may lead to the following dangers:

- Malfunction of the valve/component respectively of the plant.
- Danger for persons due to electrical, mechanical and chemical affects.
- Danger for the environment due to possible leakage of dangerous media.

3 Delivery, Completeness, Storage

- Check the data of the delivery note for factual correctness and the material for completeness. We regret that money cannot be refunded after purchase.
- Always check the material for transport damages. Possible damages have to be informed immediately.
- Store the material in a dry place and if possible in its original packaging.

4 Installation, Operation, Maintenance

Important notice !

- Valve/component suitable for vertical installation.
- Valve opens at a negative pressure of 3-5 mbar (30-50 mm WC).
  Due to the air flowing there is a pressure balance with the ambient pressure
  The valve closes again by the spring pressure.
- For higher temperatures (> 40°C) use valve No. 12525 and 12551 with stainless steel valve cone (1).
- To avoid mistakes during assembly/disassembly, pay attention to the operating instructions respectively the type plate.

4.1 Assembly instructions

Execution with heating device:

- The heating insets may only be connected according to attached scheme.
  Pay attention to the connecting voltage!
- Do not remove the heating inset from the flange during function test (heating capacity). It may get damaged by overheating.

4.2 Operation

Type 12501

Construction with plastic cone DN 25 – DN 80

- Keep the valve clean.
- Lift the valve cone from time to time.
- Exchange the O-ring (2) carefully.
- Avoid any damages at the valve seat.
- Protect vacuum valves from any force influence from outside.
  Any damage may affect the function.
- Admissible temperature: 40°C (plastic cone)

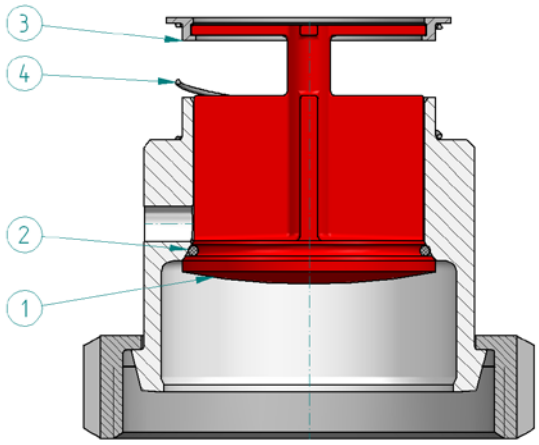

Fig. 1: with plastic valve cone

1 Valve cone
2 O-ring
3 Pressure ring
4 Pressure spring

Type 12525

Construction with stainless steel cone DN 25 – DN 80

- Keep the valve clean.
- Lift the valve cone from time to time.
- Exchange the O-ring (1) carefully.
- Avoid any damages at the valve seat.
- Protect vacuum valves from any force influence from outside.
  Any damage may affect the function.
- Admissible temperature: max. 125°C.

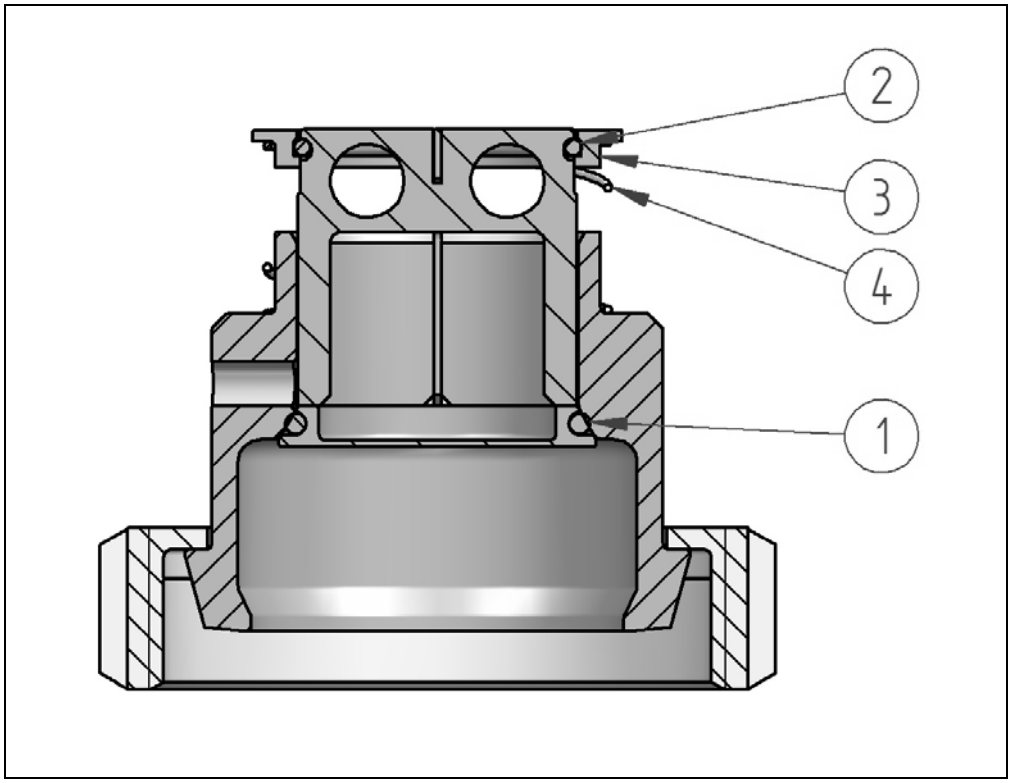

Fig. 2: with stainless steel valve cone

1 O-ring
2 Wire snap ring
3 Pressure ring
4 Pressure spring

Type 12550

Construction with stainless steel cone DN 25

- Keep the valve clean.
- Lift the valve cone from time to time.
- Exchange the O-ring (1) carefully.
- Avoid any damages at the valve seat.
- Protect vacuum valves from any force influence from outside.
  Any damage may affect the function.
- Admissible temperature: max. 125°C.

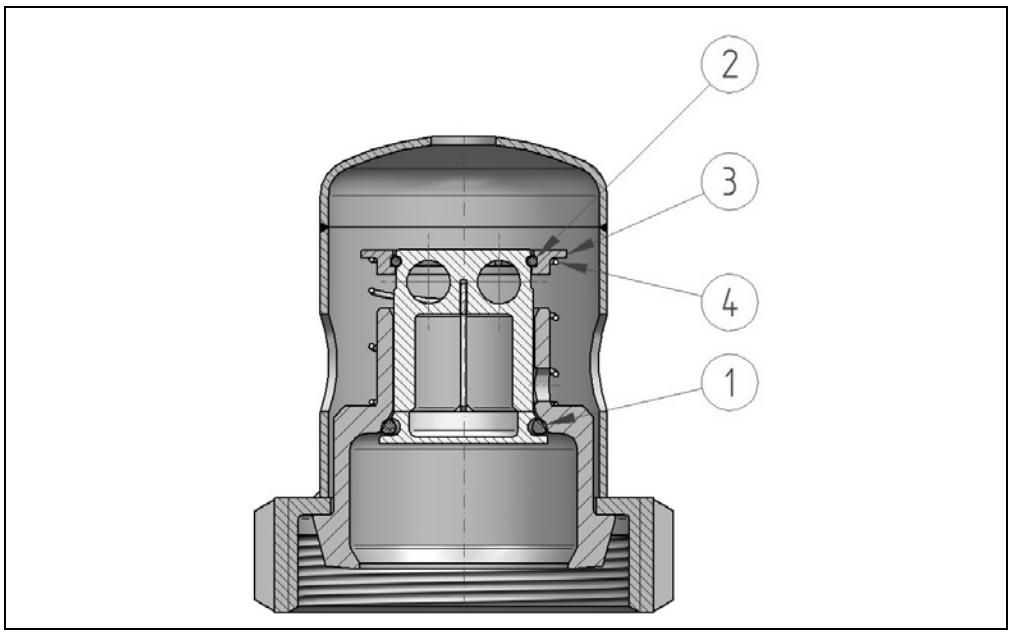

Fig. 3: with stainless steel valve cone and with splash guard cover

1 O-ring
2 Wire snap ring
3 Pressure ring
4 Pressure spring

Type 12551

Construction with stainless steel cone DN 40

- Keep the valve clean.
- Lift the valve cone from time to time.
- Exchange the O-ring (1) carefully.
- Avoid any damages at the valve seat.
- Protect vacuum valves from any force influence from outside.
  Any damage may affect the function.
- Admissible temperature: max. 125°C.

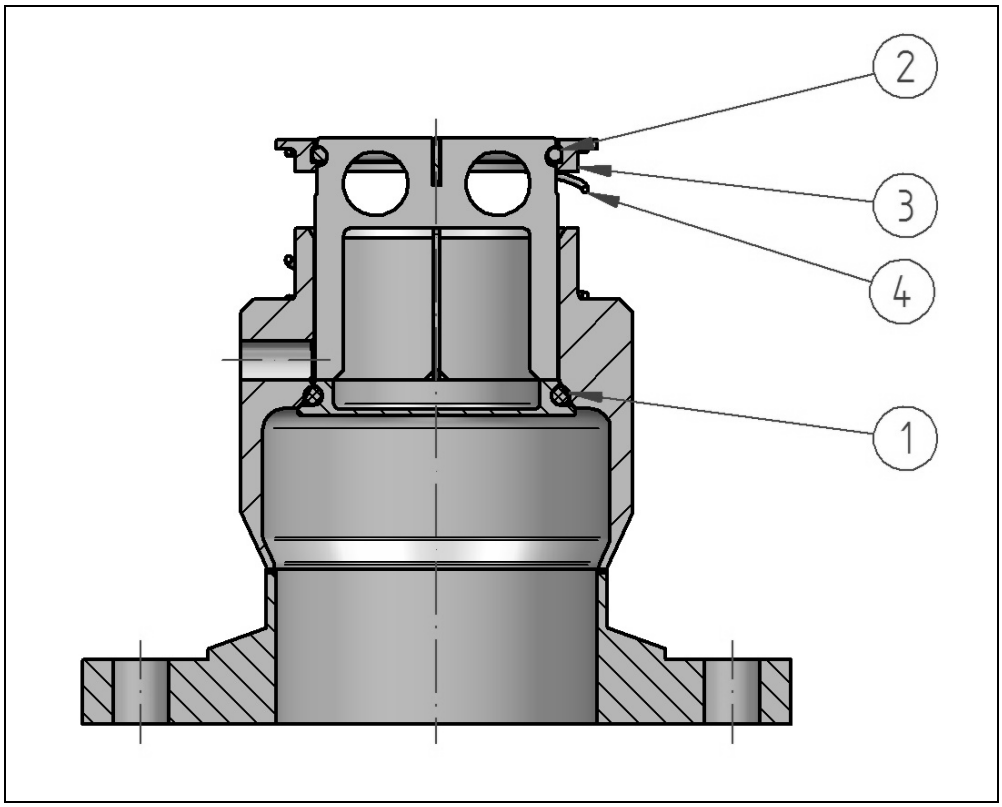

Fig. 4: with stainless steel valve cone – DN 40

1 O-ring
2 Wire snap ring
3 Pressure ring
4 Pressure spring

Type 12555

Construction with stainless steel cone DN 25

- Keep the valve clean.
- Lift the valve cone from time to time.
- Exchange the O-ring (1) carefully.
- Avoid any damages at the valve seat.
- Protect vacuum valves from any force influence from outside.
  Any damage may affect the function.
- Admissible temperature: max. 125°C.

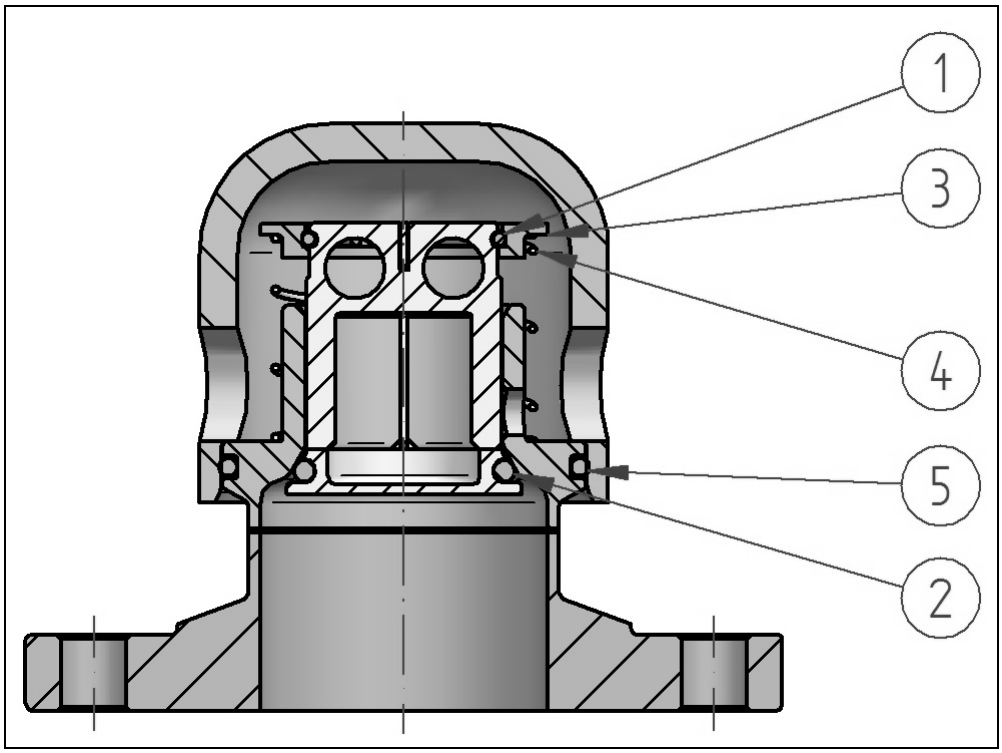

Fig. 5: with stainless steel valve cone – DN 25

1 Wire snap ring
2 O-ring
3 Pressure ring
4 Pressure spring
5 O-ring

4.3 Maintenance

- The maintenance should be executed at regular intervals of min. every year. Depending on the operating conditions of the valves, these intervals may be shorter.
- During maintenance pay attention to the assembly and safety instructions.
- Any maintenance work may be carried out only in a depressurized system.

In case of spare parts orders please inform us the order №.

Gasket material EPDM

Type 12501

Prior to assembly of the plastic valve cone (1) heat it up in warm water to approx. 40° C. Thus it will get the necessary elasticity.

ATTENTION

Note

During assembly / disassembly, please consider that the inner diameter of the pressure ring is smaller.

Disassembly: Press ring (3) against housing.

Assembly: Pull ring (3) from housing to the outside on star.

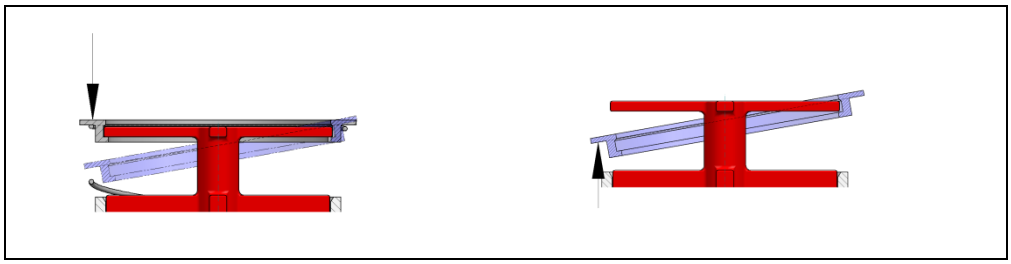

Fig. 6: Disassembly Assembly

Type 12525/12550

- Screw the valve with the coupling nut on a threaded coupling (5). Fix the valve cone with a plastic auxiliary assembly device and a round plate.
- Press the pressure ring (3) against spring tension and dismount the wire snap ring (2).
- Dismount the valve cone and exchange the o-ring (1).
- Assembly in reversed order.
- Wire snap ring (2) has to be completely in its final position in the pressure ring (3).

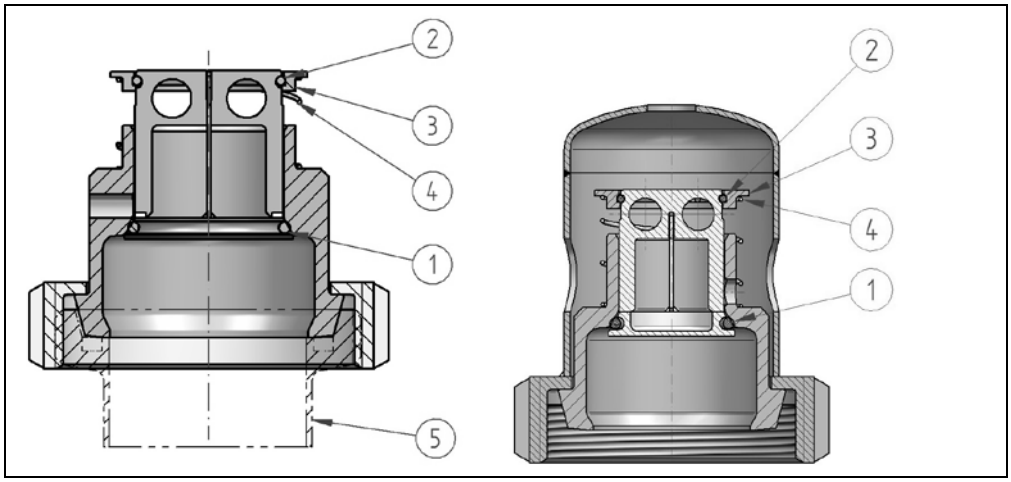

Fig. 7: Schematic representation Type 12525/12550

1 O-ring
2 Wire snap ring
3 Pressure ring
4 Pressure spring
5 Threaded coupling

Type 12551 / 12555

- Unscrew valve with APV flange from the flange. Fix the valve cone with a plastic auxiliary assembly device and a round plate.
- Remove cover, only for type 12555
- Press the pressure ring (3) against spring tension and dismount the wire snap ring (2).
- Dismount the valve cone and exchange the o-ring (1).
- Assembly in reversed order.
- Wire snap ring (2) has to be completely in its final position in the pressure ring (3).

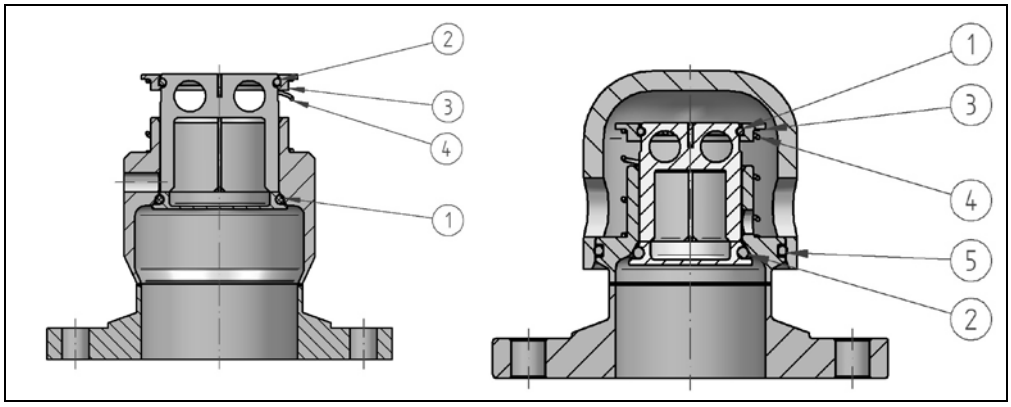

Fig. 8: Schematic representation

Type 12551		Type 12555	
1	O-ring	1	Wire snap ring
2	Wire snap ring	2	O-ring
3	Pressure ring	3	Pressure ring
4	Pressure spring	4	Pressure spring
		5	O-ring

4.4 Seals

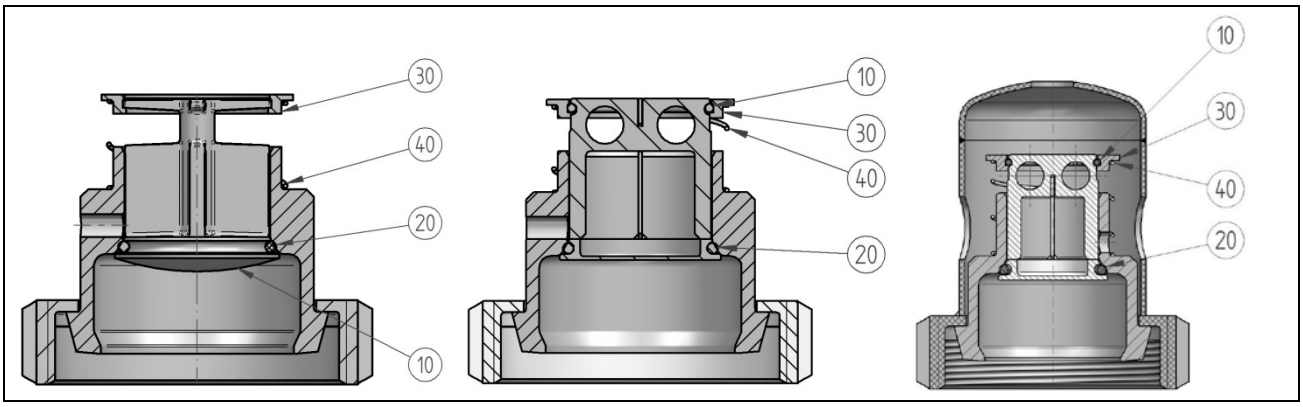

12501 12525 12550

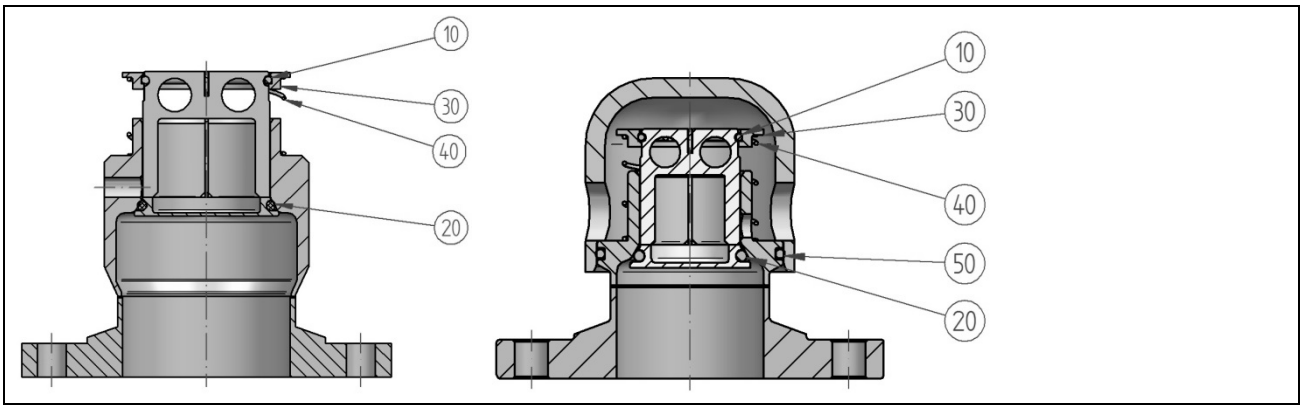

12551 12555

12501	12525	12550	12551	12555
10 Valve cone	10 Wire snap ring	10 Wire snap ring	10 Wire snap ring	10 Wire snap ring
20 O-ring	20 O-ring	20 O-ring	20 O-ring	20 O-ring
30 Pressure ring	30 Pressure ring	30 Pressure ring	30 Pressure ring	30 Pressure ring
40 Pressure spring	40 Pressure spring	40 Pressure spring	40 Pressure spring	40 Pressure spring
			50 O-ring	50 O-ring

4.5 Spare parts

DN	12501	12525	12550	12551	12555
25	012501.00025LE	012525.00025LE	012525.00025LE	---	012555.00025LE
32	012501.00032LE	012525.00032LE	---	---	---
40	012501.00040LE	012525.00040LE	---	012525.00040LE	---
50	012501.00050LE	012525.00050LE	---	---	---
65	012501.00065LE	012525.00065LE	---	---	---
80	012501.00080LE	012525.00080LE	---	---	---

LE – EPDM

4.6 Identification of components

All vacuum valves (VV) must be provided with permanent identification of the component.

– Standard vacuum valves are provided with a setting value (4 mbar) specified by us (opening pressure range 3-5 mbar)

Explanation of the identification:

Numerical code	**AH** **AH**	**VV** **VV**	**xxxxx** **xxxxx**	**xxx** **xxx**	**yyy** **yyy**	**xx / xxxxx** **xx / xxxxx**
Allocation	1	2	3	4	5	6

1 Manufacturer
2 Vacuum valve
3 Valve type
4 Nominal width / DN [mm]
5 Set negative pressure p [mbar]
6 Year of manufacture with manufacturing №

4.7 Performance diagram

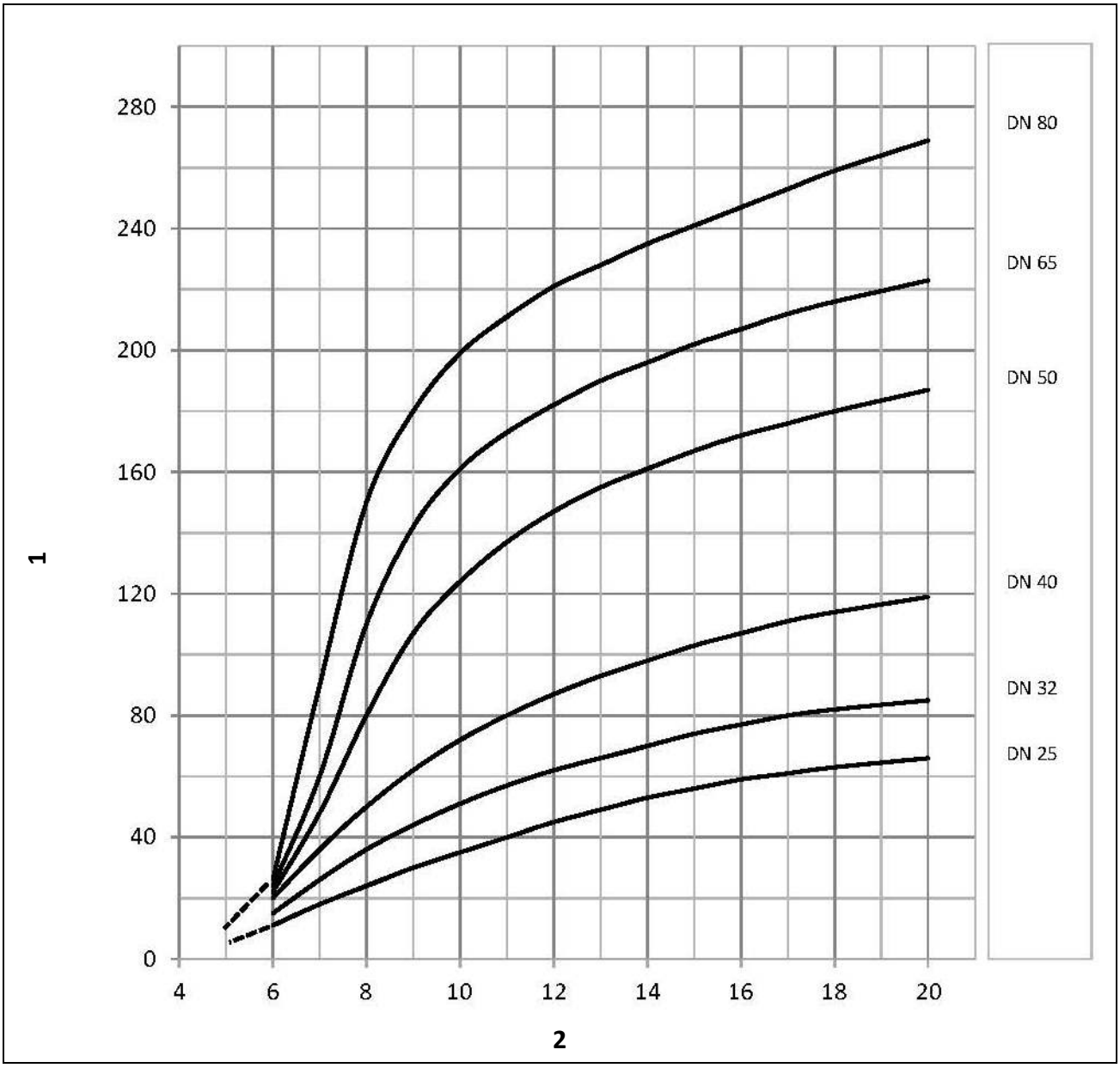

Fig. 9: Fluid - Air

1	Flow capacity [Nm³/h]
2	Vacuum pressure [mbar-g]

Conversion: 1 mbar ⇨ 10 mmWS ⇨ 100 Pa ⇨ 0.1 KPa

5 Additional Equipment

5.1 Heating insets

Heating insets							
DN	Connection-scheme №	Connection voltage Volt	Heating capacity Watt	Quantity	Rated power: Volt	Rated power: Watt	Part №
32-80	11 125E23	24	11.5	2*	24	23	105373
25	11 125E29	24	23	1*	24	23	105373

*Heating insets are integrated in the relevant heating elements

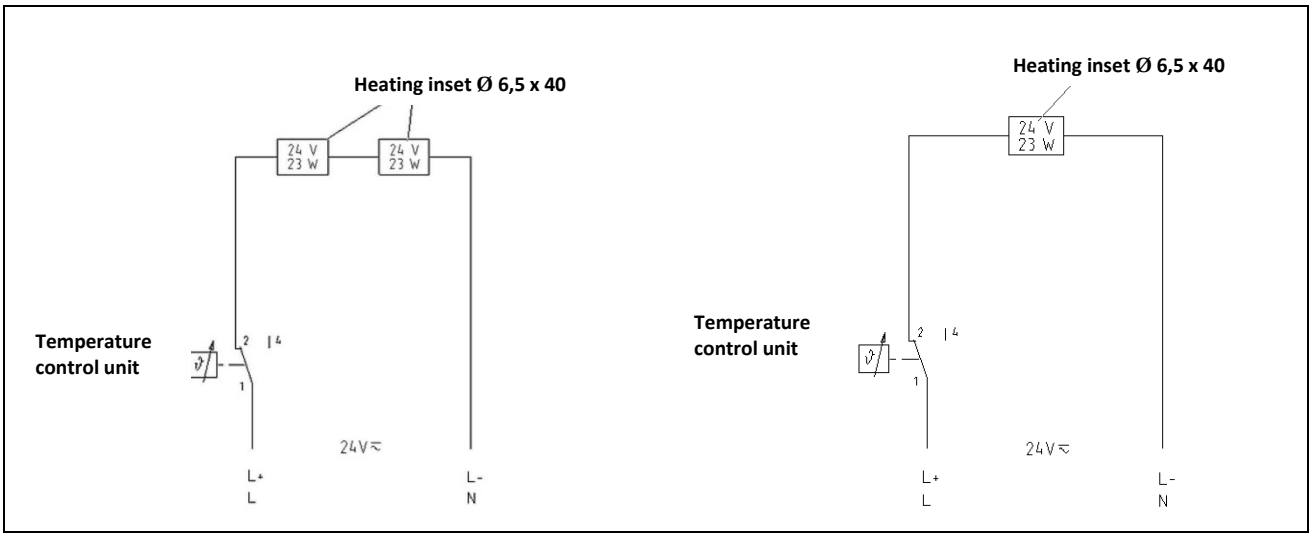

Fig. 10: E23, DN 32 - DN 80 E29, DN 25